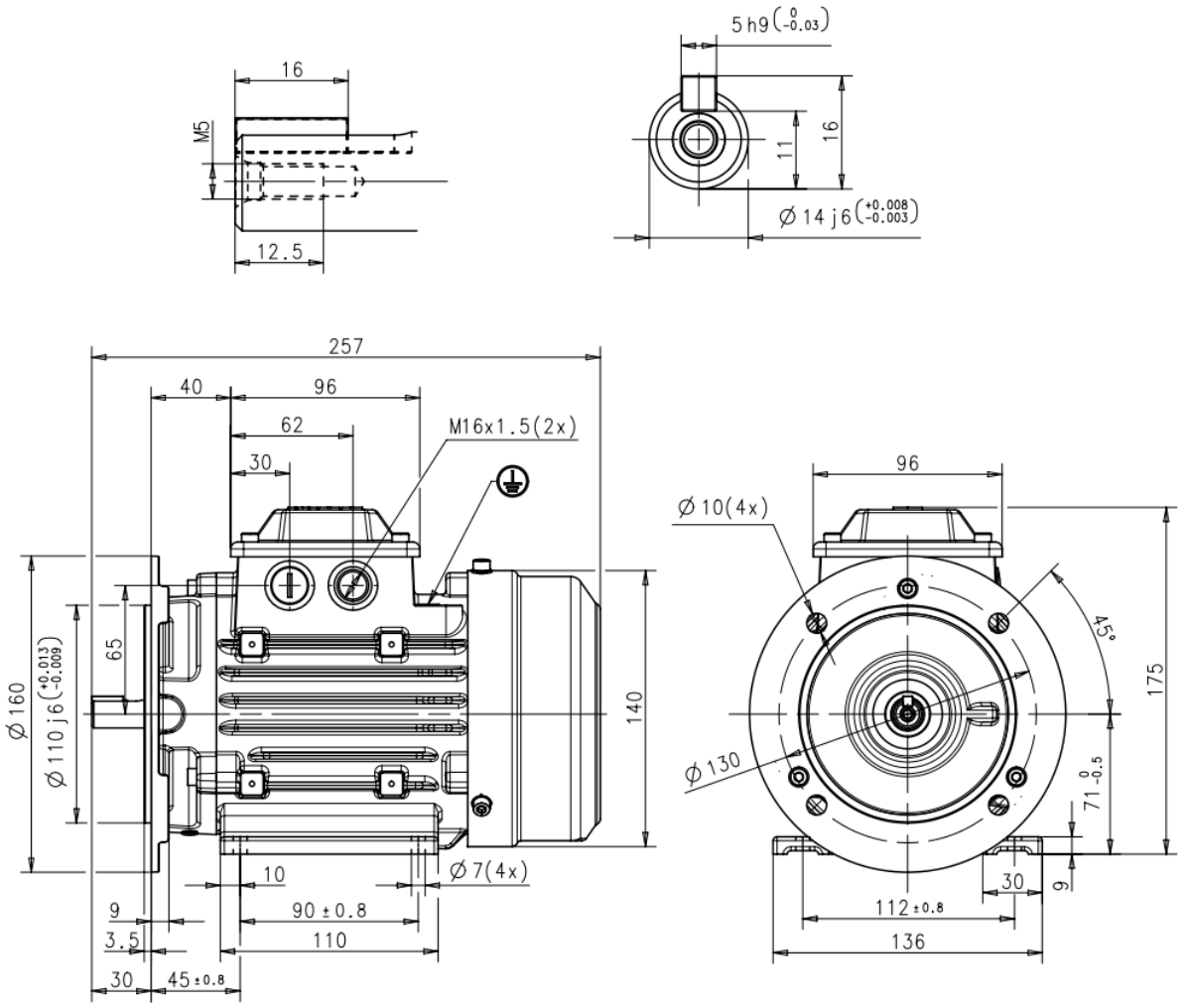

Additional information:

Dimension Print	Motor Type: IE2 M2BAX 71M_2-6 B35, V15, V36 IE3 M2BAX 71M_2-6 B35, V15, V36	Document No: 3GZC500007-15 E 14 BA 71 A
Description: STANDARD SQUIRREL CAGE MOTOR VC009		

Unit:	ABB Motors and Generators	Issued by:	Juicy Hou	Replaces:	
Date:	2016-03-17	Approved by:	Anna Feng	Replaced by:	

ABB Ltd.	Customer Reference:	ABB